wiring

ampacity, voltage drop, & grounding

Class 5 for Solar Team 4

We've talked about all the parts of your solar system
Now let's talk about what's holding it together

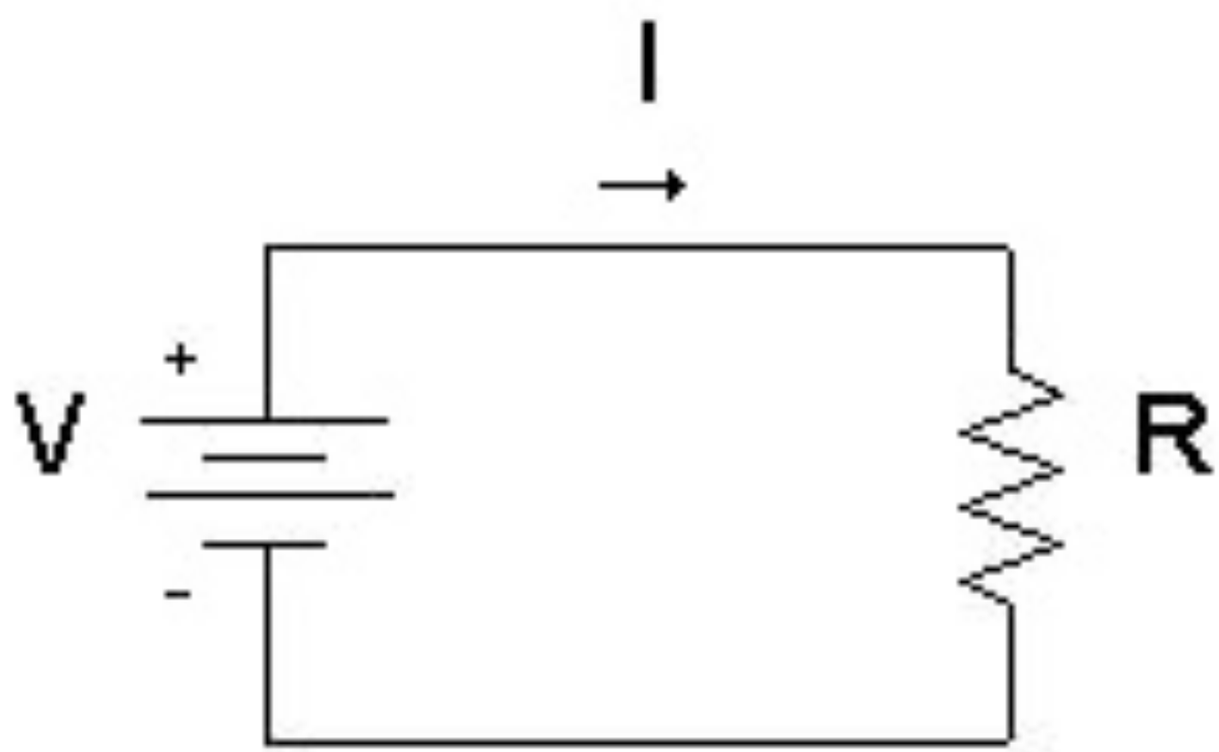

Wires

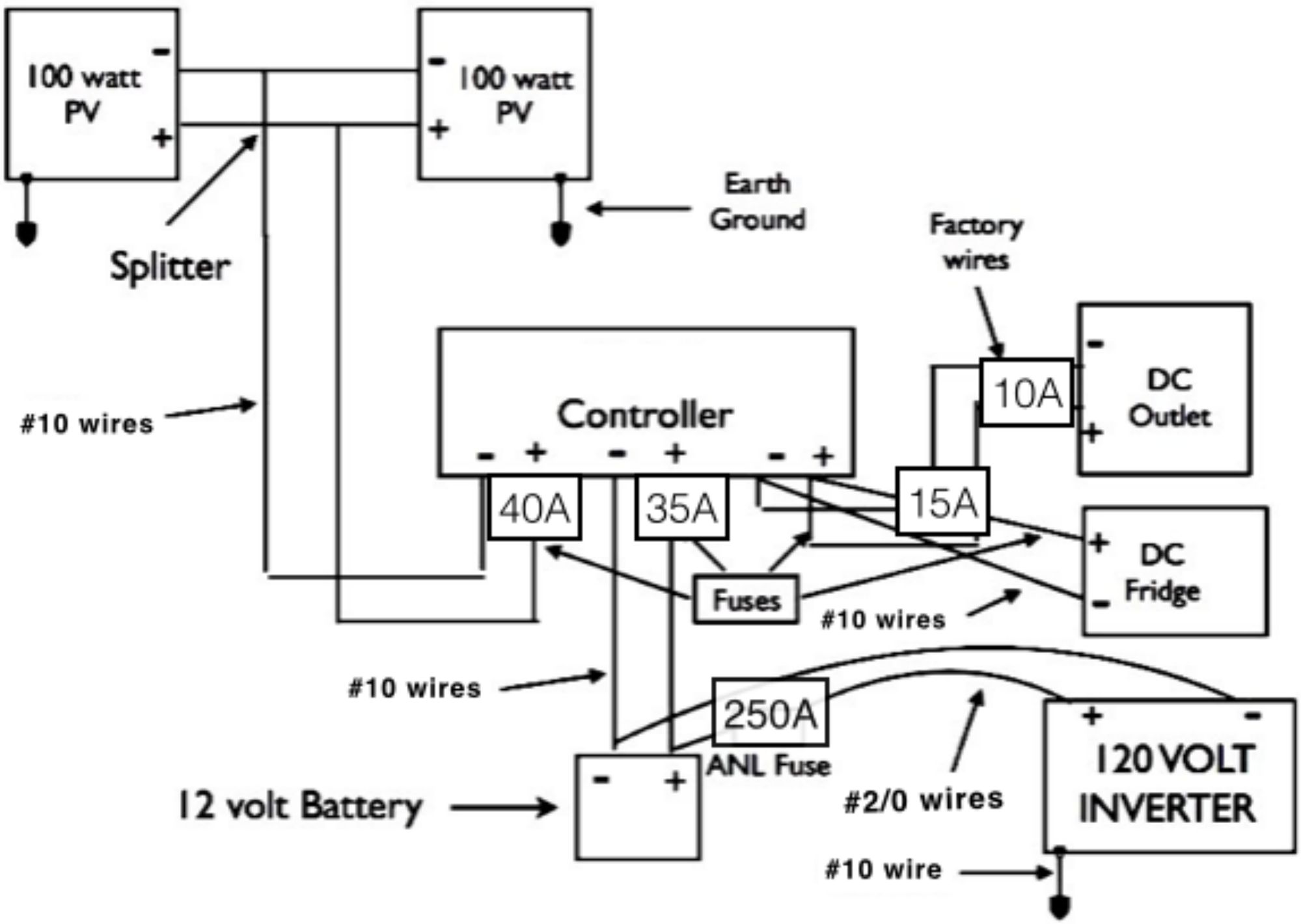
100 watt PV
100 watt PV
Earth Ground
Splitter
Factory wires
#10 wires
Controller
10A
DC Outlet
40A
35A
15A
DC Fridge
Fuses
#10 wires
#10 wires
250A
ANL Fuse
12 volt Battery
#2/0 wires
120 VOLT INVERTER
#10 wire

What is wire?

We have used Watt's Law a thousand times now it's time to pay a little attention to Ohm's (Ω's) law

Voltage = Amps x Resistance

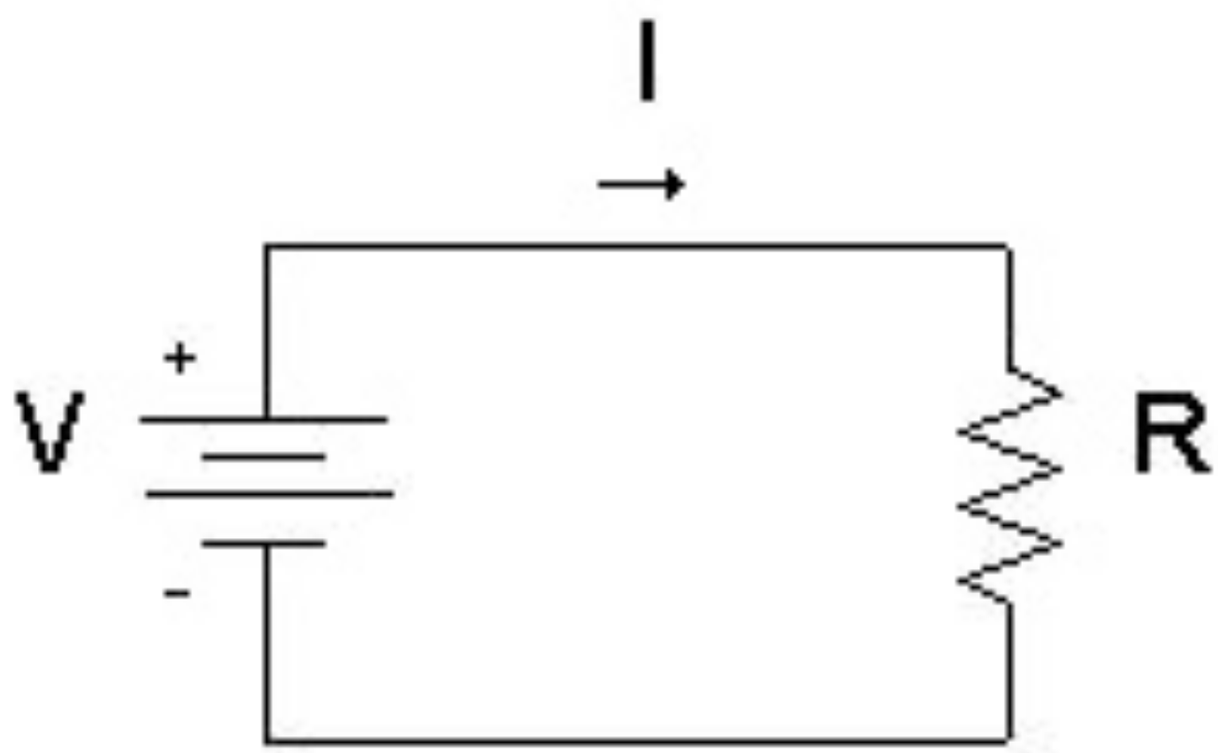

Wires are Resistance/R

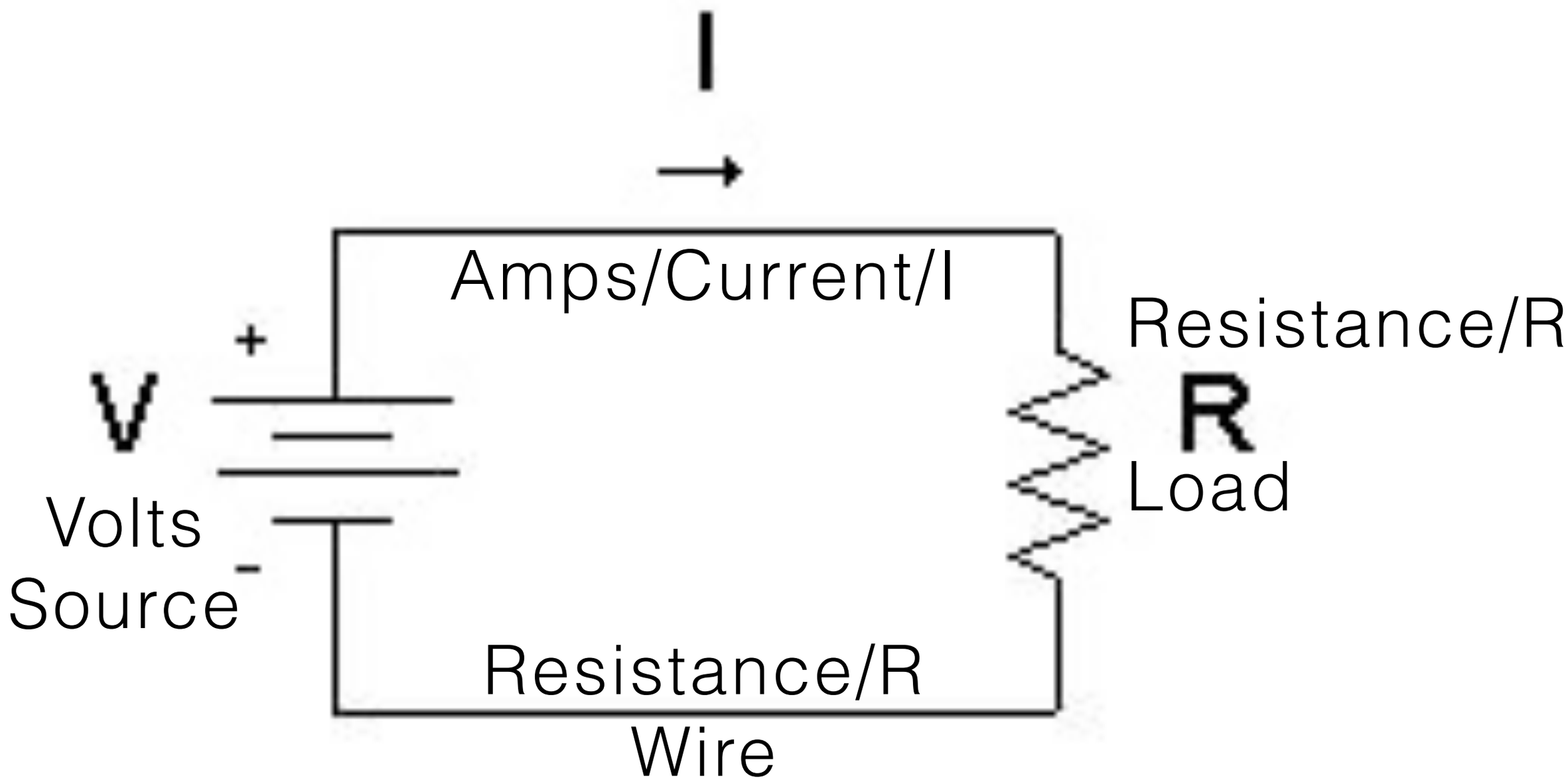

Resistance is essential.

Without resistance in a closed circuit amps will flow until the source is empty.

Wiring/Resistance/R/Ohms
control the the movement of electricity.
Look at the cartoon and think about
...Ohm's Law...

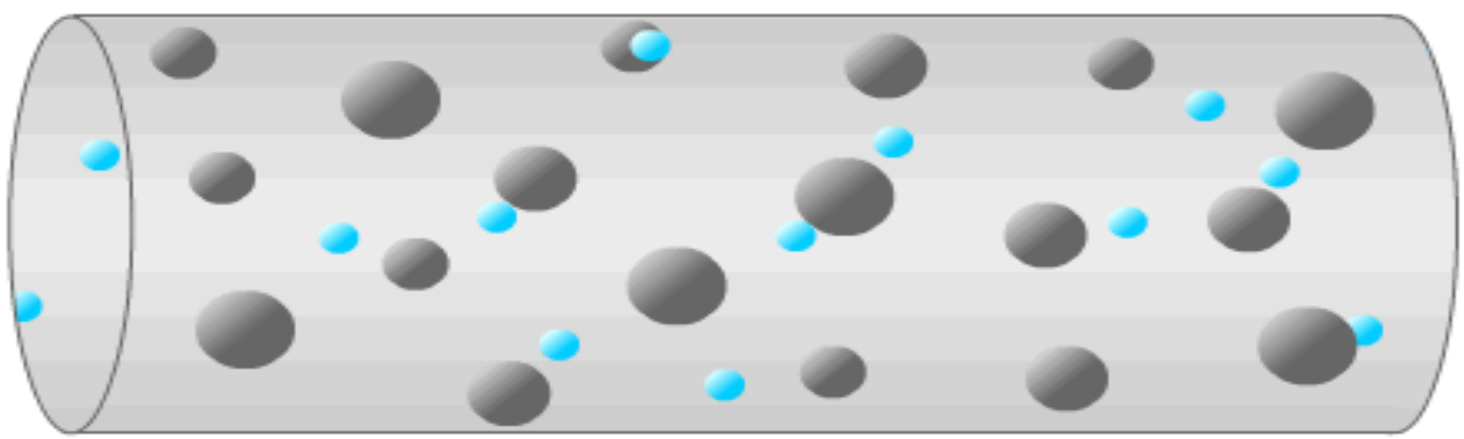

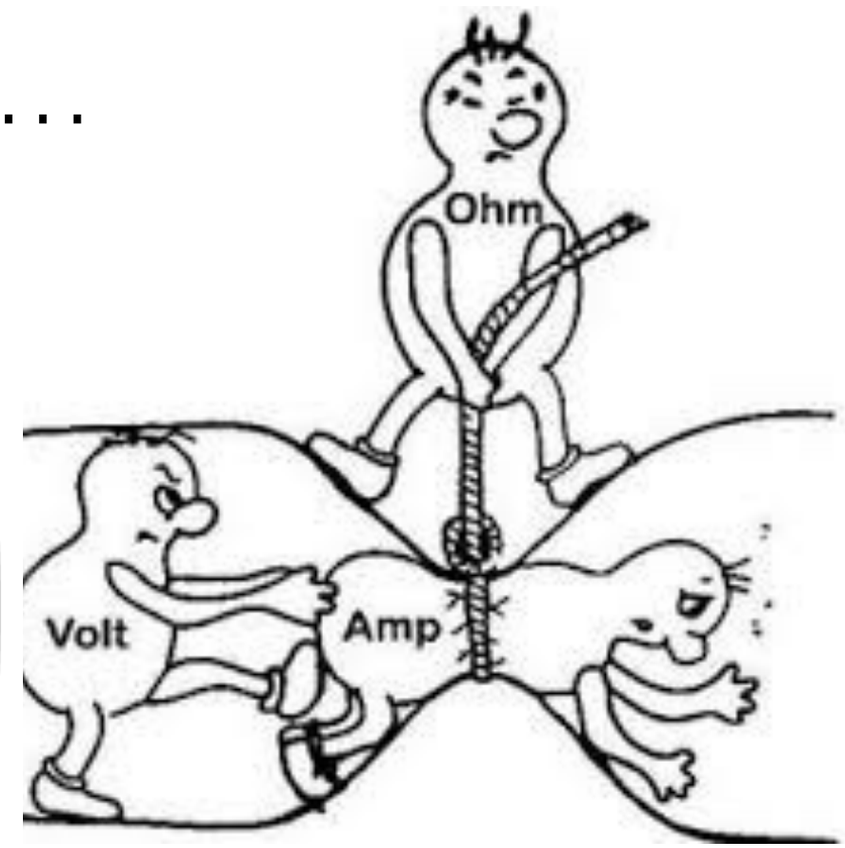

Voltage = Amps x Resistance

It's a statement of fact, more than a formula.

Now think about

The Principles of Safe Wire Sizing

Ampacity

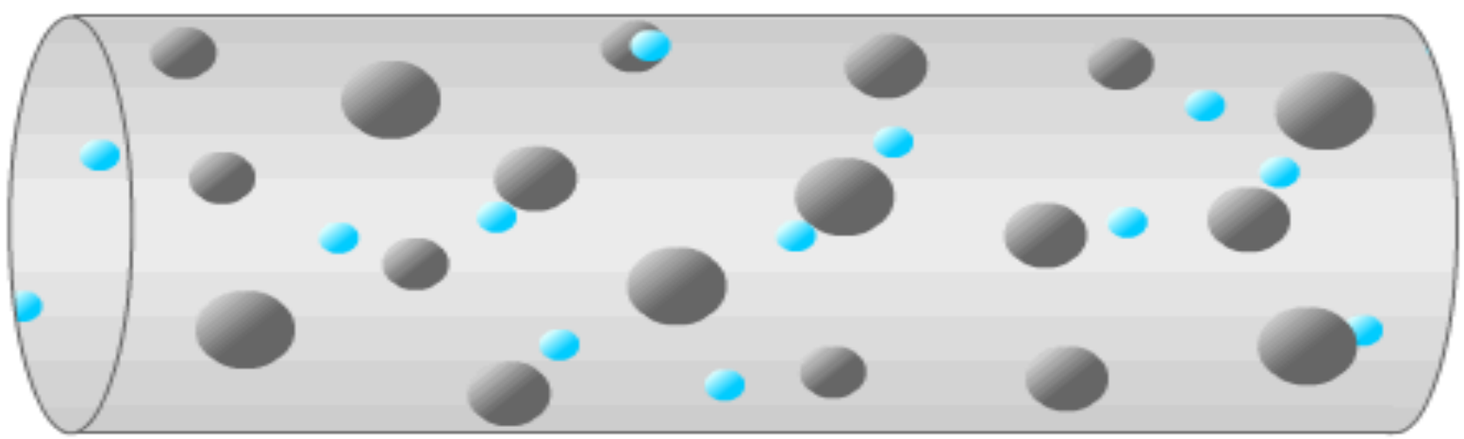

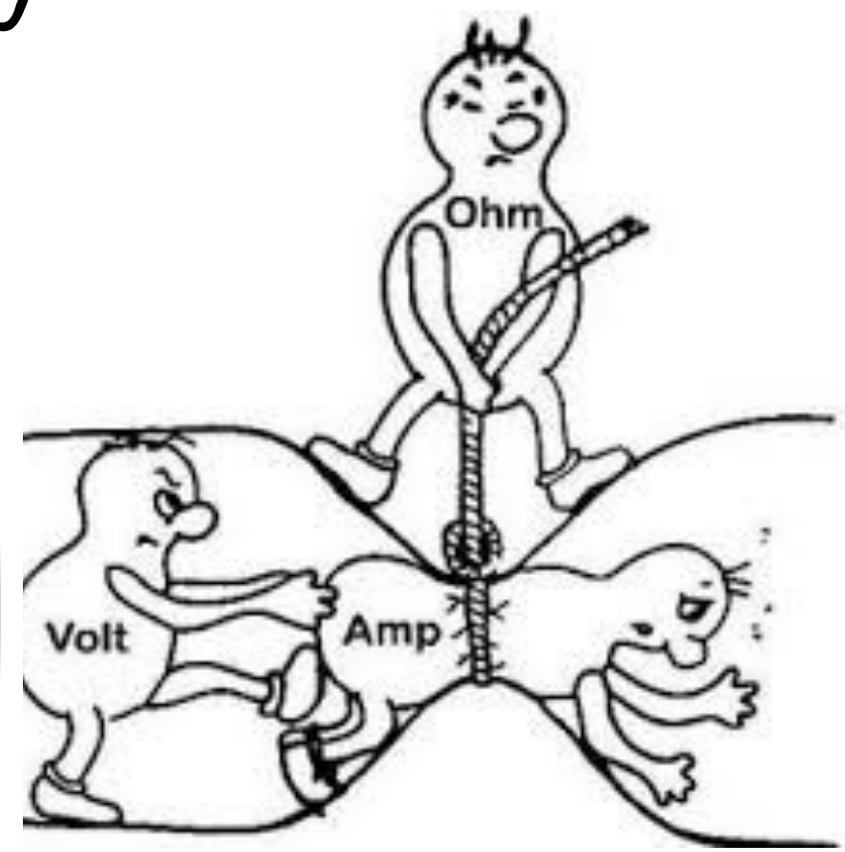

How to size wires so they can carry a current without overheating.

Ampacity

You need to know your wire type.

We are using copper wire; it has low resistance.

You need a larger aluminum wire

to carry the same amount of amps.

A larger wire has a smaller number. Just to confuse us.

Maximum Ampacity for Copper and Aluminum Wire		
Wire Size	**Copper**	**Aluminum**
14	25	
12	30	25
10	40	35
8	55	45
6	75	60
4	95	75
2	130	100
1	150	115
1/0	170	135
2/0	265	150
4/0	360	205

Ampacity

Ampacity refers to the current carrying capacity of a wire.

The larger the wire the greater its capacity to carry current/I (amps).

Using wire with ampacity too low to carry a specified current will overheat the wire.

Overheating means wasted energy, inefficiency and can result in melted insulation, a short circuit or fire.

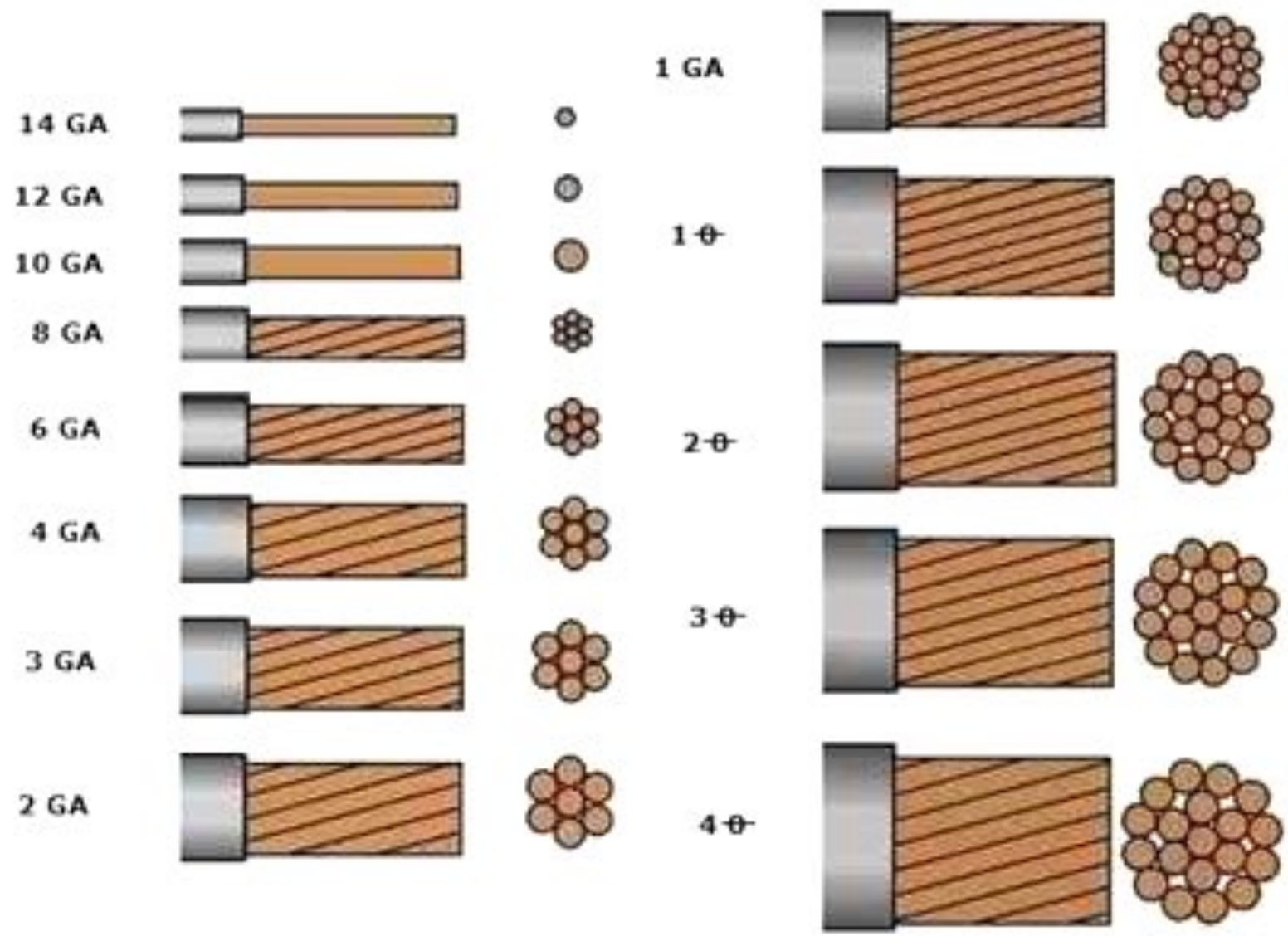

Wire size is given in terms of American Wire Gauge (AWG) (GA in the above illustration)

Here's your system again.
#'s indicate American Wire Gauge/AWG
Which wire is the largest? Why?

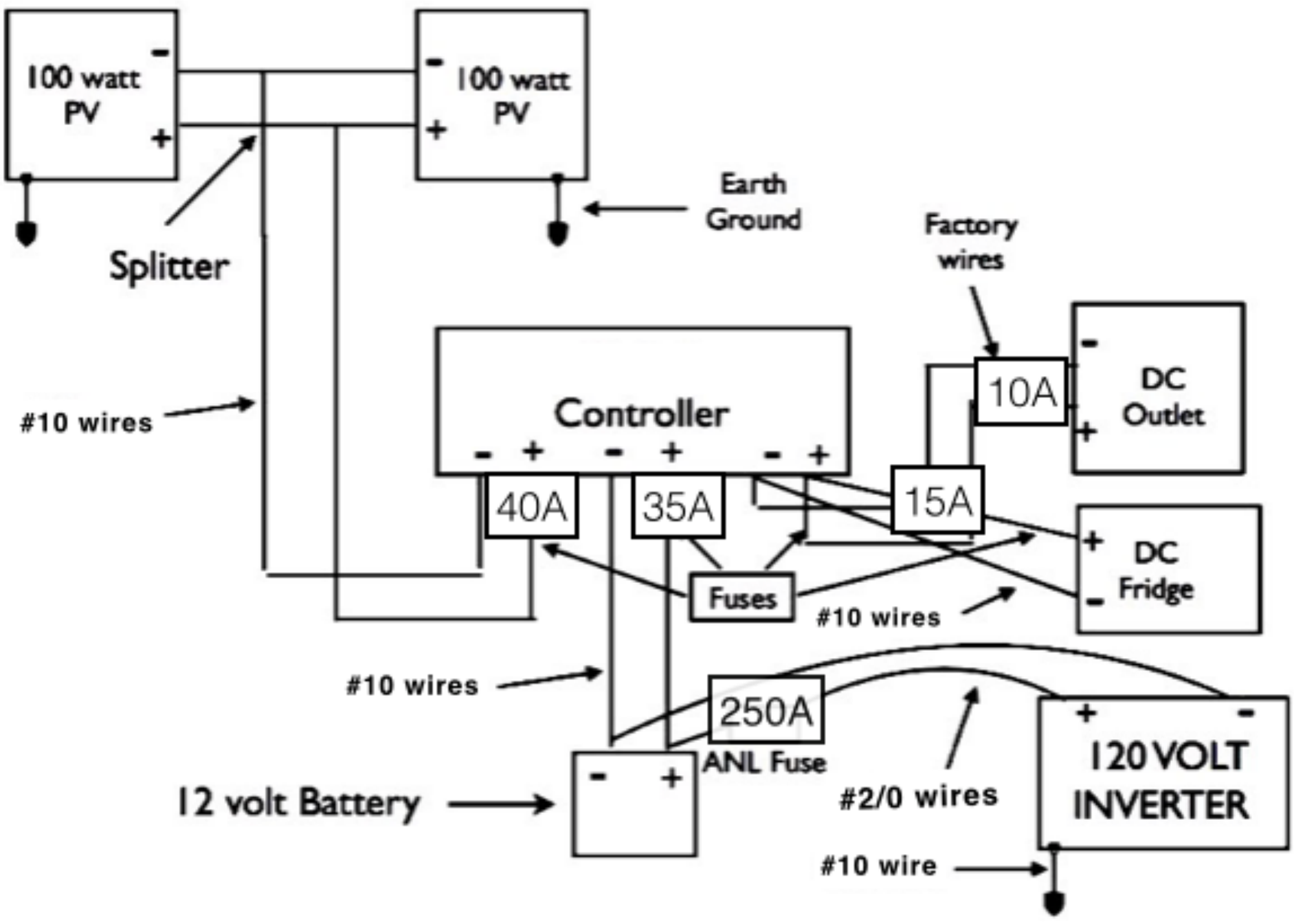

Boom!

This is the hardest working wire in your system. #2/0 AWG

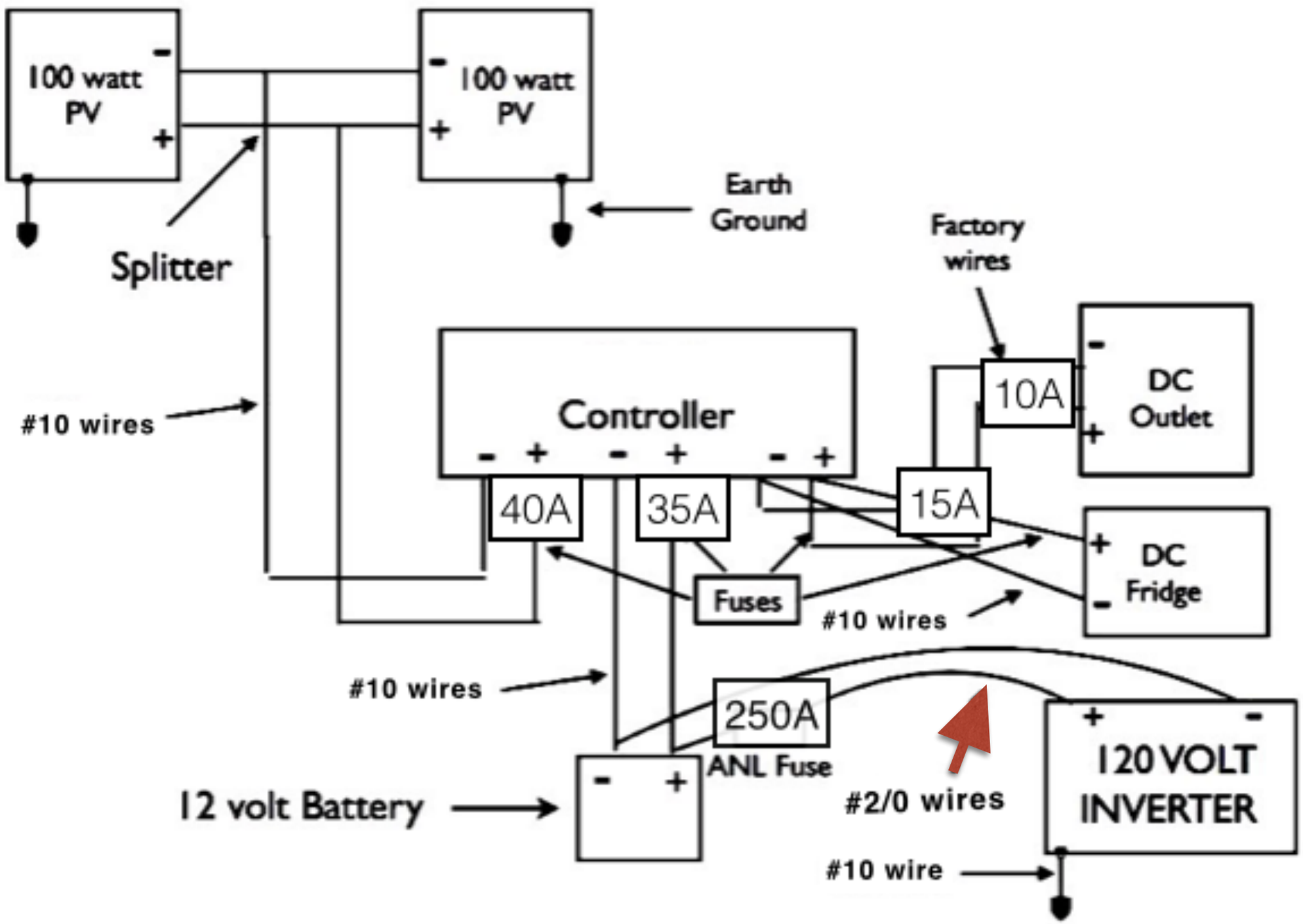

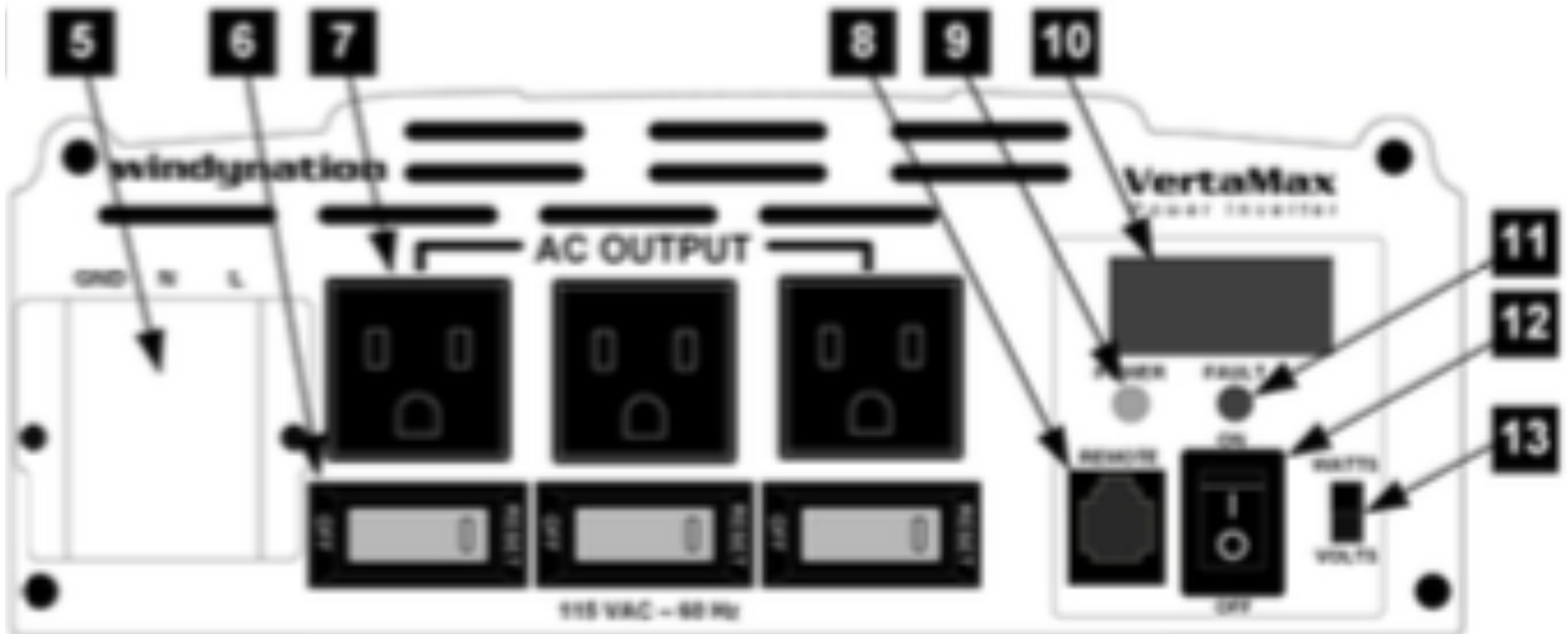

Your 1500W inverter is drawing

1500W ÷ 12V = 125A

from the battery

Actually it can be much higher when

an appliance has a startup surge.

The 250 amp fuse allows start-up surge

to pass through before melting

and cutting off power.

But on the AC side of the inverter wires can be #12, #14 or smaller, 10x smaller than #2. Why?

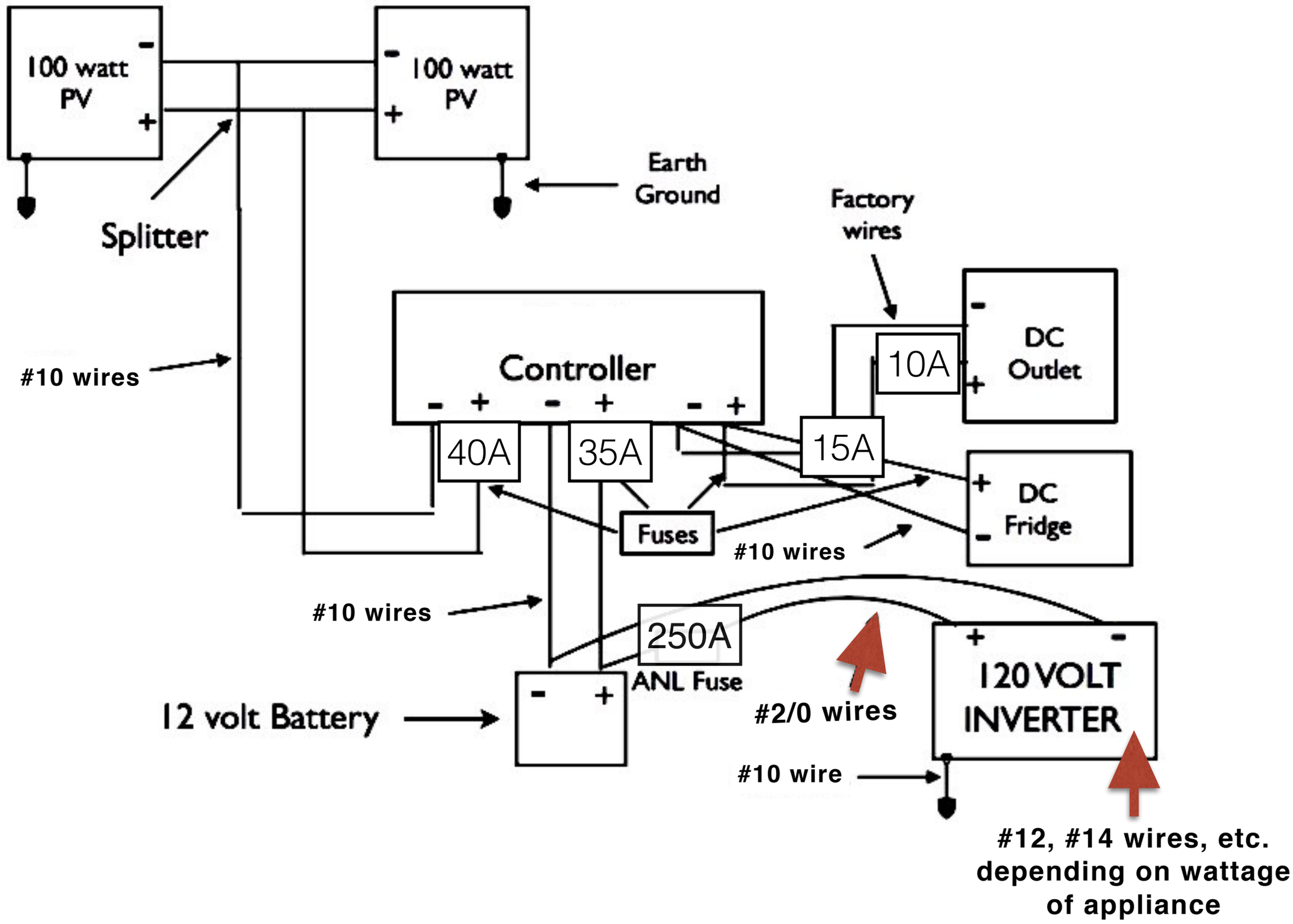

Remember!

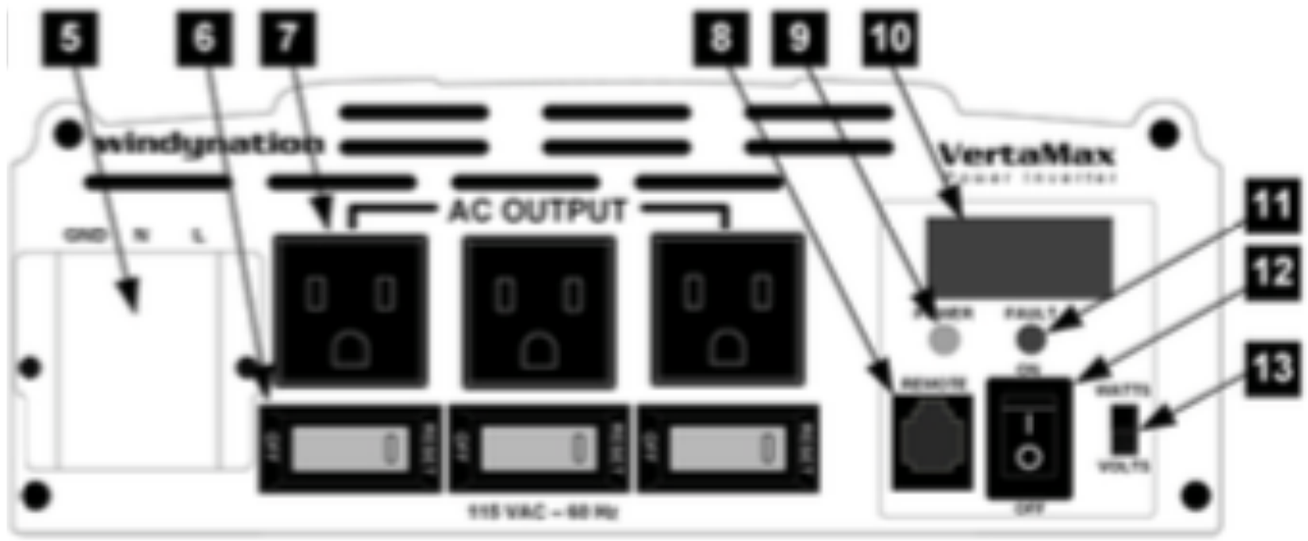

The inverter supplies 120V,

10 times higher than the 12V battery

so the amperage coming from it

is ten times lower.

1500W ÷ 120V = 12.5A

Watts Law: W ÷ V = A

Voltage Drop

Amperage/Current needs a larger wire
to carry larger amps/current/I
without overheating.

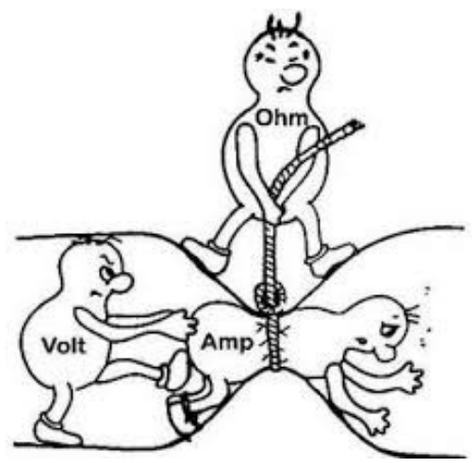

Likewise Voltage needs a larger wire
to go long distance without losing power.

Ohm's Law
Voltage Drop = Amps x Resistance

Voltage Drop

Voltage drop is a function of the following three parameters.

Wire gauge

Length of wire

Current flow in the wire

The greater a wire's length, the greater the resistance to current flow. Excessively long wire will result in a loss of power to the load and lower system efficiency. It will also reduce the life expectancy of most appliances and equipment.

Ohm's Law is essentially
the measurement of Voltage Drop
VD = IR
Ohm's Law shows
the amount of voltage V, or "voltage drop VD",
required to send amps over a certain resistance,
if you know the amps and resistance.

But resistance is a function
of the material of the wire itself
which you may not know
so we usually use tables
which use wire gauge
as reference.

Wire Gauge Reference

Ampacity/Voltage Drop Table from the inverter manual

Cable Length (feet)	Load Amperage – Power @ 12VDC												
	10A 120W	20A 240W	30A 360W	40A 480W	50A 600W	60A 720W	70A 840W	80A 960W	100A 1200W	120A 1440W	160A 1920W	200A 2400W	250A 3000W
2	16AWG	16AWG	14AWG	12AWG	10AWG	8AWG	8AWG	6AWG	4AWG	2AWG	2AWG	2/0AWG	3/0AWG
4	16AWG	16AWG	14AWG	12AWG	10AWG	8AWG	6AWG	6AWG	4AWG	2AWG	1AWG	2/[illegible]G	4/0AWG
6	16AWG	14AWG	12AWG	10AWG	8AWG	6AWG	6AWG	4AWG	2AWG	2AWG	1/0AWG	3/[illegible]G	4/0AWG
8	16AWG	14AWG	12AWG	10AWG	8AWG	6AWG	6AWG	4AWG	2AWG	2AWG	1/0AWG	3/[illegible]G	4/0AWG
10	16AWG	14AWG	12AWG	10AWG	8AWG	6AWG	6AWG	4AWG	2AWG	2AWG	1/0AWG	3/0AWG	4/0AWG
12	14AWG	14AWG	12AWG	10AWG	8AWG	6AWG	6AWG	4AWG	2AWG	2AWG	1/0AWG	3/0AWG	4/0AWG
16	14AWG	12AWG	12AWG	10AWG	8AWG	6AWG	6AWG	4AWG	2AWG	2AWG	1/0AWG	3/0AWG	4/0AWG
20	14AWG	12AWG	10AWG	8AWG	6AWG	6AWG	4AWG	4AWG	2AWG	2AWG	2/0AWG	4/0AWG	4/0AWG
24	12AWG	12AWG	10AWG	8AWG	6AWG	4AWG	4AWG	2AWG	1AWG	1AWG	2/0AWG	4/0AWG	4/0AWG
28	12AWG	10AWG	8AWG	8AWG	6AWG	4AWG	4AWG	2AWG	1AWG	1AWG	2/0AWG	4/0AWG	4/0AWG
33	10AWG	10AWG	8AWG	6AWG	4AWG	4AWG	4AWG	2AWG	1AWG	1AWG	2/0AWG	4/0AWG	4/0AWG
42	10AWG	8AWG	6AWG	6AWG	4AWG	4AWG	2AWG	1AWG	1/0AWG	1/0AWG	3/0AWG	4/0AWG	NR
50	8AWG	6AWG	6AWG	4AWG	4AWG	2AWG	2AWG	1AWG	1/0AWG	1/0AWG	3/0AWG	NR	NR

Based on the most amps

that could go from the battery to your inverter

your #2 wire could be 2 feet long.

That's how far your inverter can be from your battery.

Wire Gauge Reference

Ampacity/Voltage Drop Table from the inverter manual

Cable Length (feet)	Load Amperage – Power @ 12VDC												
	10A 120W	20A 240W	30A 360W	40A 480W	50A 600W	60A 720W	70A 840W	80A 960W	100A 1200W	120A 1440W	160A 1920W	200A 2400W	250A 3000W
2	16AWG	16AWG	14AWG	12AWG	10AWG	8AWG	8AWG	6AWG	4AWG	2AWG	2AWG	2/0AWG	3/0AWG
4	16AWG	16AWG	14AWG	12AWG	10AWG	8AWG	6AWG	6AWG	4AWG	2AWG	1AWG	2/0AWG	4/0AWG
6	16AWG	14AWG	12AWG	10AWG	[illegible]	6AWG	6AWG	4AWG	2AWG	2AWG	1/0AWG	3/0AWG	4/0AWG
8	16AWG	14AWG	12AWG	10AWG	[illegible]	6AWG	6AWG	4AWG	2AWG	2AWG	1/0AWG	3/0AWG	4/0AWG
10	16AWG	14AWG	12AWG	10AWG	[illegible]	6AWG	6AWG	4AWG	2AWG	2AWG	1/0AWG	3/0AWG	4/0AWG
12	14AWG	14AWG	12AWG	10AWG	8AWG	6AWG	6AWG	4AWG	2AWG	2AWG	1/0AWG	3/0AWG	4/0AWG
16	14AWG	12AWG	12AWG	10AWG	8AWG	6AWG	6AWG	4AWG	2AWG	2AWG	1/0AWG	3/0AWG	4/0AWG
20	14AWG	12AWG	10AWG	8AWG	6AWG	6AWG	4AWG	4AWG	2AWG	2AWG	2/0AWG	4/0AWG	4/0AWG
24	12AWG	12AWG	10AWG	8AWG	6AWG	4AWG	4AWG	2AWG	1AWG	1AWG	2/0AWG	4/0AWG	4/0AWG
28	12AWG	10AWG	8AWG	8AWG	6AWG	4AWG	4AWG	2AWG	1AWG	1AWG	2/0AWG	4/0AWG	4/0AWG
33	10AWG	10AWG	8AWG	6AWG	4AWG	4AWG	4AWG	2AWG	1AWG	1AWG	2/0AWG	4/0AWG	4/0AWG
42	10AWG	8AWG	6AWG	6AWG	4AWG	4AWG	2AWG	1AWG	1/0AWG	1/0AWG	3/0AWG	4/0AWG	NR
50	[illegible]	6AWG	6AWG	4AWG	4AWG	2AWG	2AWG	1AWG	1/0AWG	1/0AWG	3/0AWG	NR	NR

How long can your #10AWG wire be?

If it's carrying 10A it can be 42 feet long

But if carrying 50A it can only be 4 feet.

So what are going to be the longest wires in your system?

Probably the wire to your PV if you want to keep it out of the shade of your house.
Gallup Solar cables are #10


OK , your teacher couldn't bear to
ditch the panels that served her so
well for 27 years.

Ampacity and Voltage Drop of PV Wire Run

100W Polycrystalline Photovoltaic Solar Panel

Part #:	SOL-100P-01
Maximum Power (Pmax):	100 Watts
Open Circuit Voltage (Voc):	21.90 Volts
Short Circuit Current (Isc):	6.13 Amps
Max Power Voltage (Vpm):	18.00 Volts
Max Power Current (Imp):	5.56 Amps
Max System Voltage:	1000 VDC (600 VDC UL)
Dimensions:	40.1" x 26.4" x 1.4" [1020mm x 670mm x 35mm]
Weight:	19.6 lbs [8.9kg]
Max Series Fuse Rating:	10 Amps
Nom Operating Cell Temp:	45 C [+/-2]

This is the label on the back of your panel again

To find the maximum amperage of the wire run from the PV panels to the controller use the module short circuit current (Isc) x number of panels in parallel.

6.13 x 2 = 12.26 amps*

x 1.25 = 15.33 amps

x 1.25 = 19.17 amps

use 20 amps

*For safety multiply the current by 125%.
National Electric Code requires an additional 125% be added to the current from PV to batteries in case of exceptionally cold sunny days.

Wire Gauge Reference

Ampacity/Voltage Drop Table from the inverter manual

Cable Length (feet)	Load Amperage – Power @ 12VDC												
	10A 120W	20A 240W	30A 360W	40A 480W	50A 600W	60A 720W	70A 840W	80A 960W	100A 1200W	120A 1440W	160A 1920W	200A 2400W	250A 3000W
2	16AWG	16AWG	14AWG	12AWG	10AWG	8AWG	8AWG	6AWG	4AWG	2AWG	2AWG	2/0AWG	3/0AWG
4	16AWG	16AWG	14AWG	12AWG	10AWG	8AWG	6AWG	6AWG	4AWG	2AWG	1AWG	2/0AWG	4/0AWG
6	16AWG	14AWG	12AWG	10AWG	8AWG	6AWG	6AWG	4AWG	2AWG	2AWG	1/0AWG	3/0AWG	4/0AWG
8	16AWG	14AWG	12AWG	10AWG	8AWG	6AWG	6AWG	4AWG	2AWG	2AWG	1/0AWG	3/0AWG	4/0AWG
10	16AWG	14AWG	12AWG	10AWG	8AWG	6AWG	6AWG	4AWG	2AWG	2AWG	1/0AWG	3/0AWG	4/0AWG
12	14AWG	14AWG	12AWG	10AWG	8AWG	6AWG	6AWG	4AWG	2AWG	2AWG	1/0AWG	3/0AWG	4/0AWG
16	14AWG	12AWG	12AWG	10AWG	8AWG	6AWG	6AWG	4AWG	2AWG	2AWG	1/0AWG	3/0AWG	4/0AWG
20	14AWG	12AWG	10AWG	8AWG	6AWG	6AWG	4AWG	4AWG	2AWG	2AWG	2/0AWG	4/0AWG	4/0AWG
24	12AWG	12AWG	10AWG	8AWG	6AWG	4AWG	4AWG	2AWG	1AWG	1AWG	2/0AWG	4/0AWG	4/0AWG
28	12AWG	10AWG	8AWG	8AWG	6AWG	4AWG	4AWG	2AWG	1AWG	1AWG	2/0AWG	4/0AWG	4/0AWG
33	10AWG	10AWG	8AWG	6AWG	4AWG	4AWG	4AWG	2AWG	1AWG	1AWG	2/0AWG	4/0AWG	4/0AWG
42	10AWG	8[illegible]	6AWG	6AWG	4AWG	4AWG	2AWG	1AWG	1/0AWG	1/0AWG	3/0AWG	4/0AWG	NR
50	8AWG	6[illegible]	6AWG	4AWG	4AWG	2AWG	2AWG	1AWG	1/0AWG	1/0AWG	3/0AWG	NR	NR

Based on 20amps max

from your 2 100W panels in parallel

the furthest you can go from your controller

with a #10 gauge wire is 33 feet.

Grounding

System Grounding is achieved when one of the conductive wires is intentionally given a direct path to the earth. This is commonly accomplished by running a wire to a ground rod, a long copper rod driven directly into the soil.

In systems smaller than 50V like yours *Equipment Grounding* is all that is required. The grounding wire goes from the equipment, not the conductor, to the ground rod.

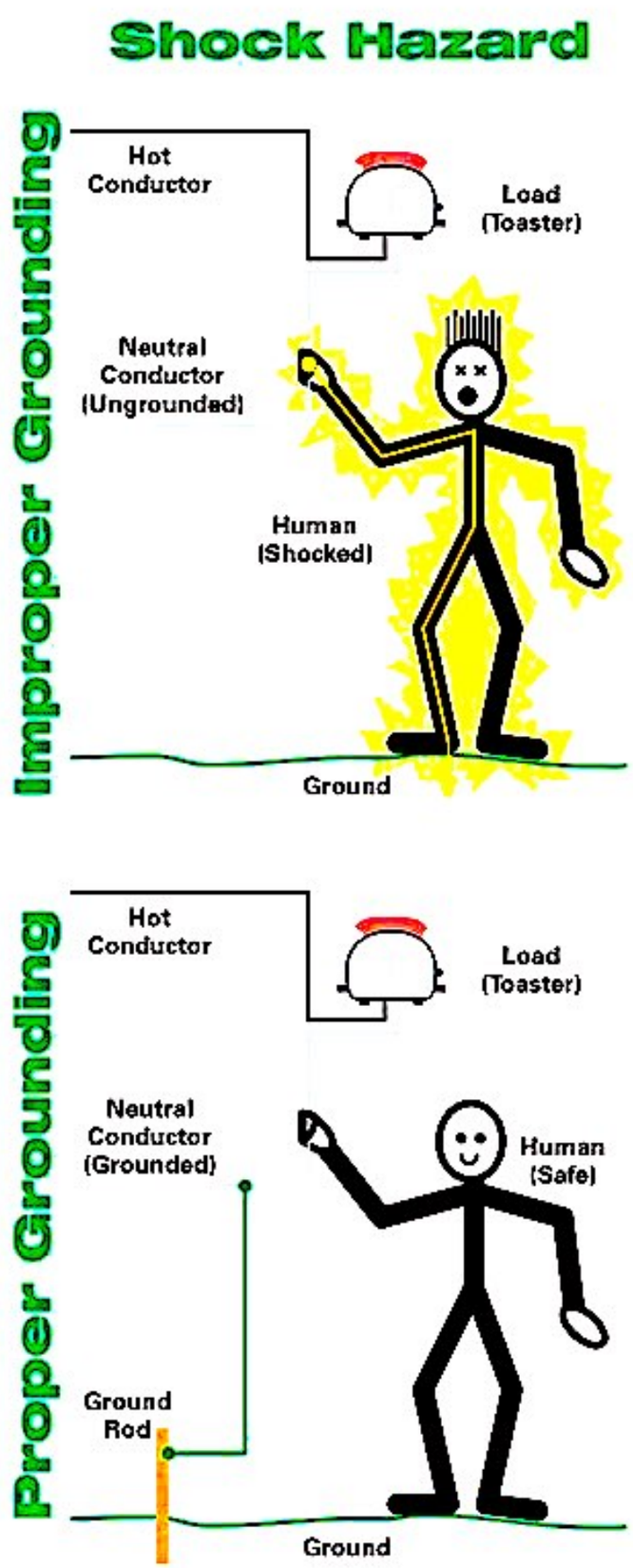

System Grounding

Solar systems with a system voltage over 50 volts are required to be grounded by having one of the current-carrying conductors connected to the grounding electrode.

Your12 volt PV system has a system voltage of about 27 volts on the coldest days.

Yours is not required to have system grounding.

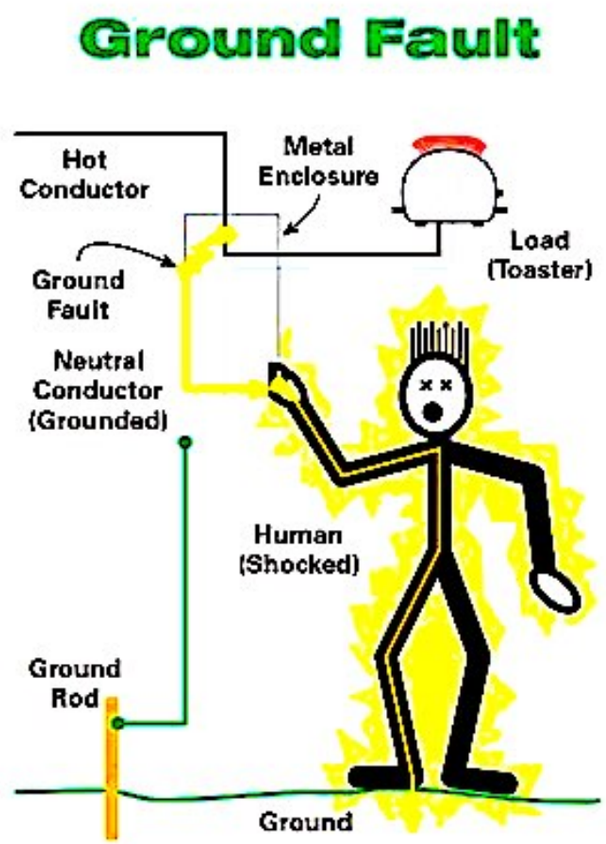

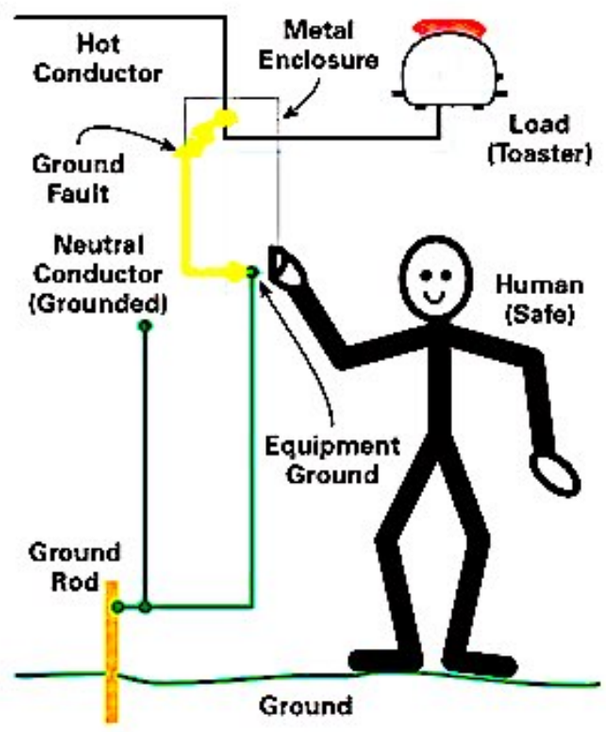

Ground Fault

A ground fault is an inadvertent contact between an energized conductor and ground or equipment frame. The return path of the fault current is through the grounding system and any personnel or equipment that becomes part of that system. Ground faults are frequently the result of insulation breakdown.

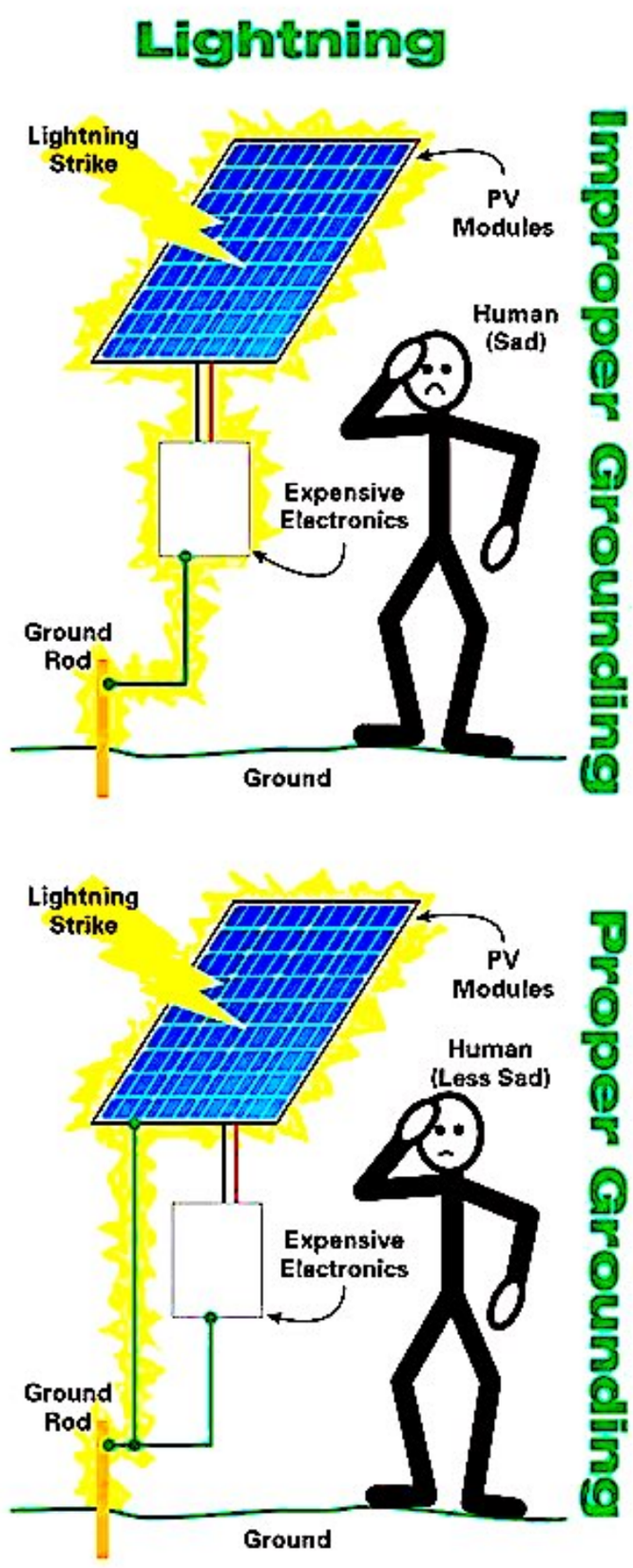

Equipment Grounding

An equipment-grounding conductor is a conductor that does not normally carry current (except under fault conditions) and is also connected to earth.

It is used to connect the exposed metal surfaces of electrical equipment together and then to ground.

Only your solar panels and inverter need Equipment Grounding.

GROUNDING SOLAR PANELS

This 4’ copper rod is an equipment ground attached to the frame of the solar panels. It hit a rock but is 20” submerged and your teacher hopes it will send any lightening strikes into the ground.

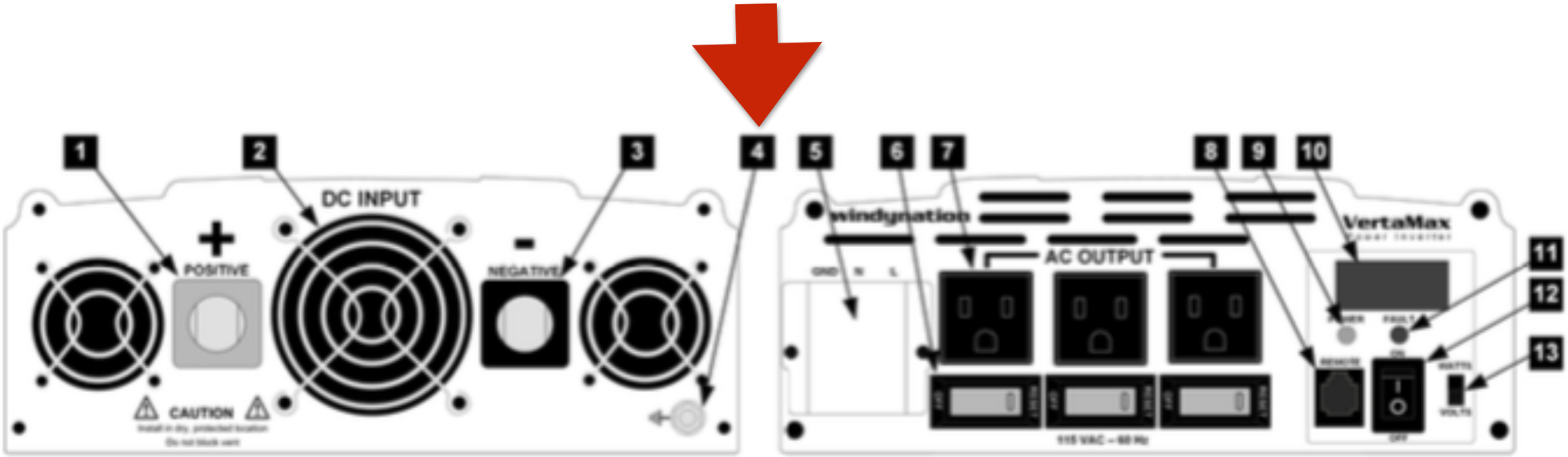

1	DC Positive (+) Input	8	Remote Switch Port[3]
2	Cooling Fan[1]	9	Power LED
3	DC Negative (-) Input	10	Digital Display Meter
4	Grounding Terminal	11	Fault LED
5	Permanent AC Connection[2]	12	ON/OFF Switch
6	Circuit Breaker Protector [x3]	13	Digital Display Select Switch
7	AC Outlets [x3]		

[1]Number of fans depends on model

GROUNDING THE INVERTER

A copper wire will go from the grounding terminal on your inverter to earth ground either to the grounding rod on the solar panels or to its own grounding rod.


Try for this

HOMEWORK

Please tell us in an email sometime before the end of the year:

1. Who will benefit from this project and how?
2. What life styles will be changed and how?
3. How will you incorporate the knowledge you gained in your professional life?

LATER

When you have finished your installation
and it is up and running ***we want to hear your story.***

It can be a video for youtube, an article for publication with photos or a presentation at a Gallup Solar meeting.

GO TEAM!


Now we turn you over to Bill
for hands-on training!!!!!